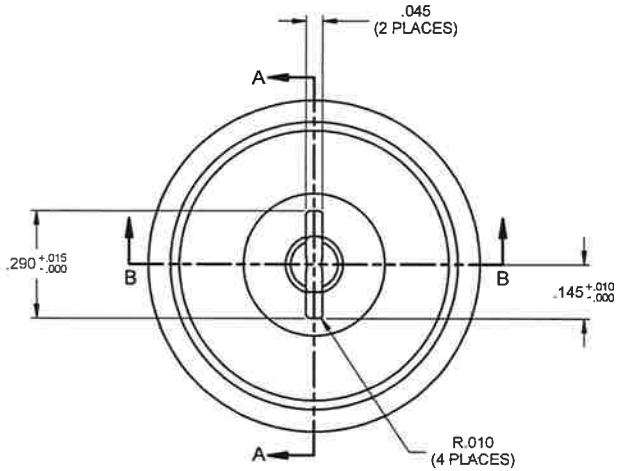

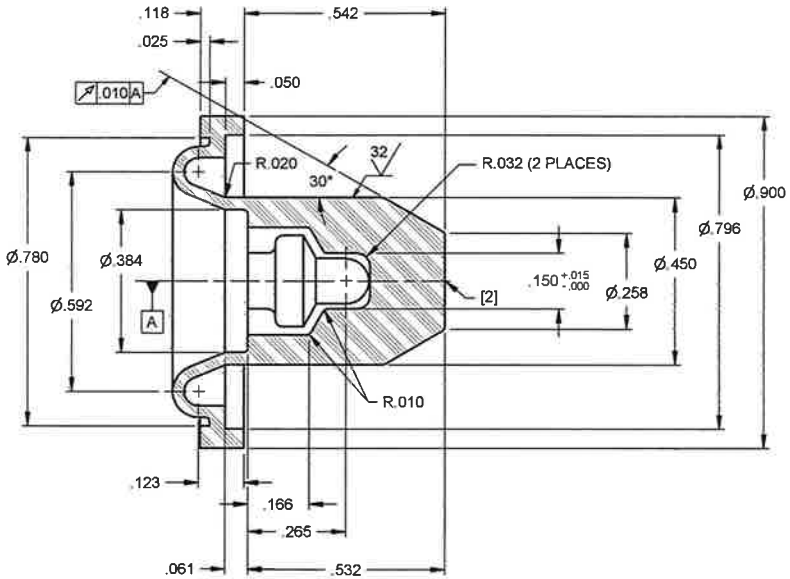

SECTION A-A

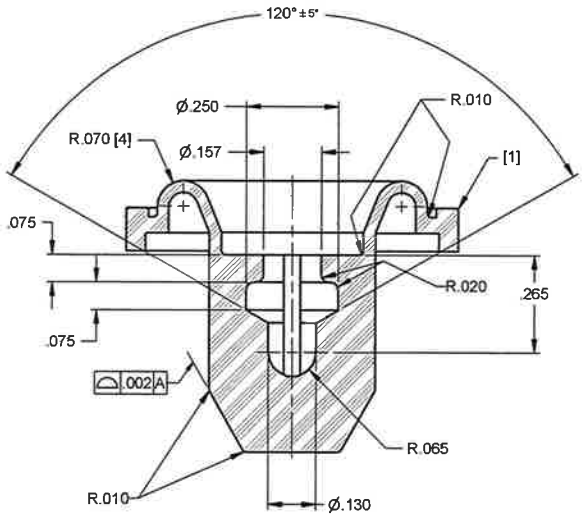

SECTION B-B

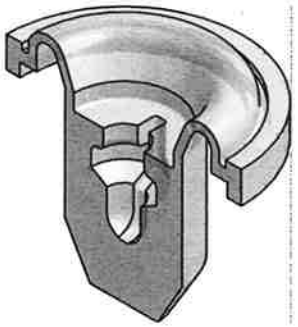

NOTES:

[1] .020" MAX. FLASH ALLOWED.
[2] GATE - Ø.040 x .015 PROTRUSION OR DEPRESSION.
[3] SILICONE RUBBER - FDA APPROVED
DUROMETER = 40 ± 5
MAX. COMPRESSION SET 15%
WACKER ELASTOSIL 3003/40, NATURAL COLOR
MATERIAL CERTIFICATE OF COMPLIANCE REQUIRED.
[4] .028- .034 THICKNESS THROUGHOUT WEB.

P568

REV.	DESCRIPTION	DATE	BY	REV.	DESCRIPTION	DATE	BY
	RELEASED FOR PRODUCTION						

MATERIAL: SEE NOTE [3]
FINISH:
FIRST USED ON: 70409-60

TOLERANCE (UNLESS SHOWN): .XXX ± .005, .XX ± .01, DEG ± 30', ◇ CRITICAL
DIMENSIONS PER ANSI/ASME Y14.5-1994
TOOL No.

SCALE: 4:1
DATE: 1/17/2018
DR. BY: JHS
CHK. BY:
APPR. BY:

DELTROL controls
MILWAUKEE, WI. U.S.A.

NAME: DIAPHRAGM, DSVP14

I | DWG. NO. C | 70084-05 | REV